Mata kuliah: **Teknik Otomasi**

Squential Function Charts

Eka Maulana, ST, MT, MEng.

Department of Electrical Engineering

Brawijaya University

Squential Function Charts (SFC)

Used for a **pictorial representation** of a system's operation to show the sequence of events involved in its operation

Ex: SFC of Traffic Light

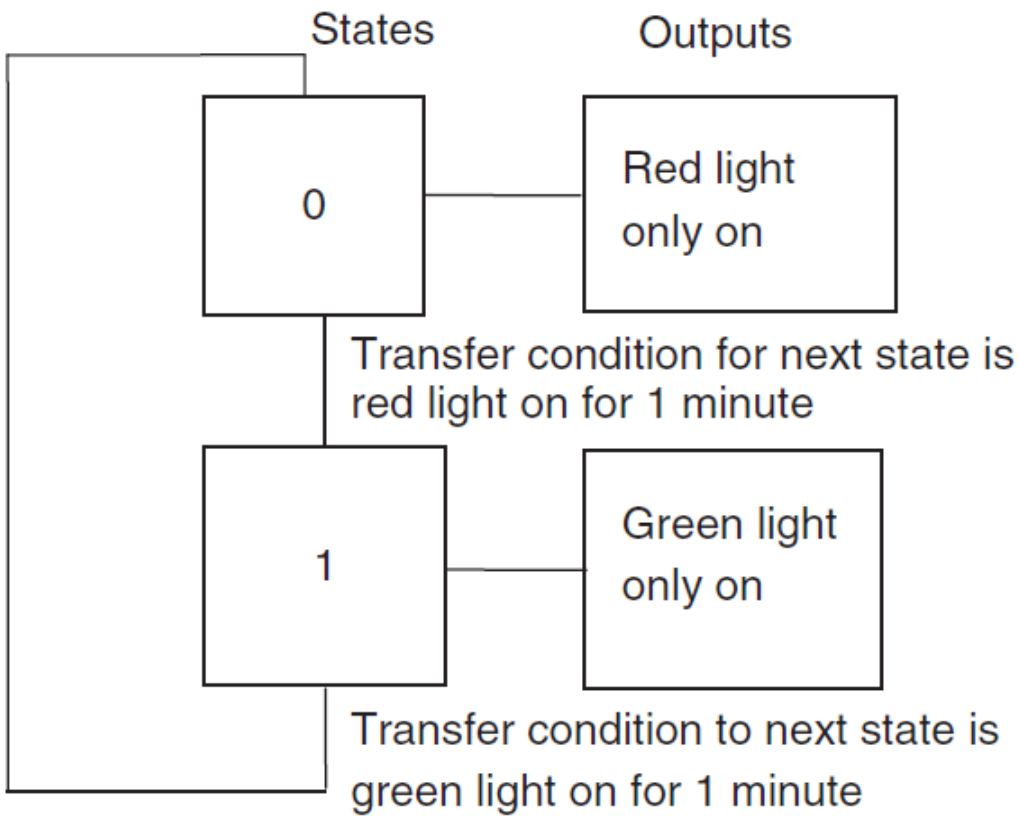

Element of SFC

- The operation is described by a number of separate sequentially connected states or **steps** that are represented by rectangular boxes, each representing a particular state of the system being controlled.
- The **initial step** in a program is represented differently from the other steps.

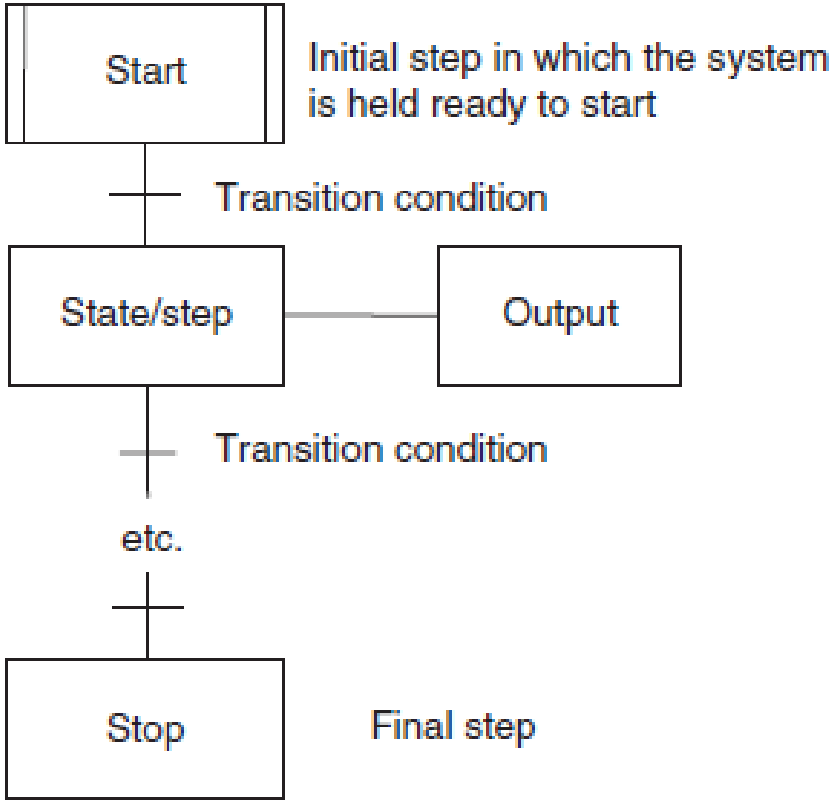

Element of SFC

- Each connecting line between **states** has **a horizontal bar** representing the transition condition that has to be realized before the system can move from one state to the next.
- Two steps can never be directly connected; they must always be separated by a transition.
- Two transitions can never directly follow from one to another; they must always be separated by a step.

Element of SFC

- When the transfer conditions to the next state are realized, the next state or step in the program occurs.
- The process thus continues from one state to the next until the complete machine cycle is completed.
- **Outputs/actions** at any state are represented by horizontally linked boxes and occur when that state has been realized.

SFC and Equivalen Ladder Diagram

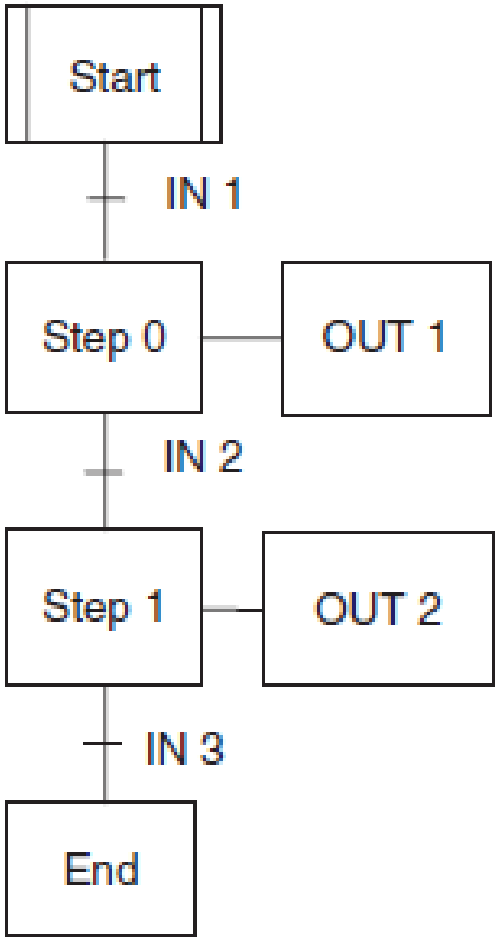

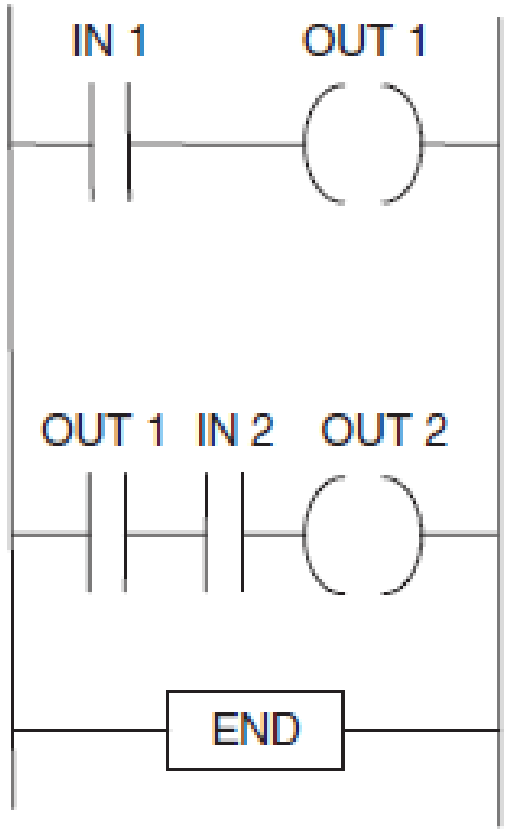

Step 0
When IN 1 occurs, then step 0 is realized and OUT 1 occurs

Step 1
When step 1 has been realized, i.e. OUT 1, and the transfer condition IN 2, then step 1 is realized and OUT 2 occurs

Ex. SFC of Washing Machine

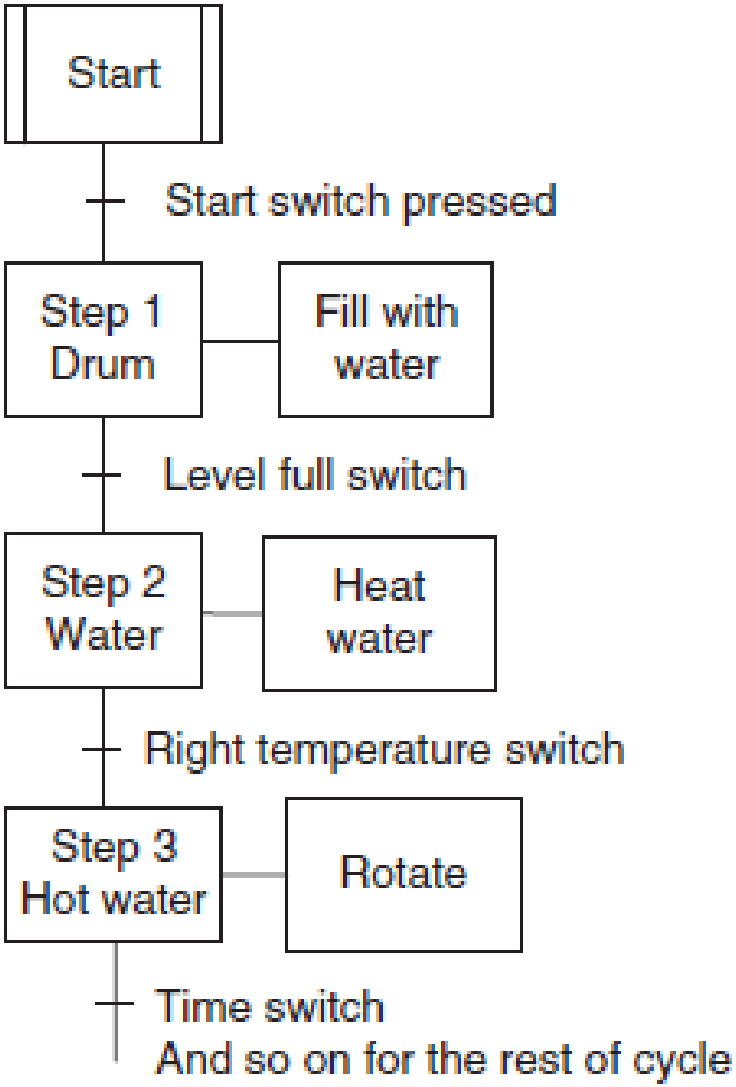

Brancing and Convergence

Selective Brancing

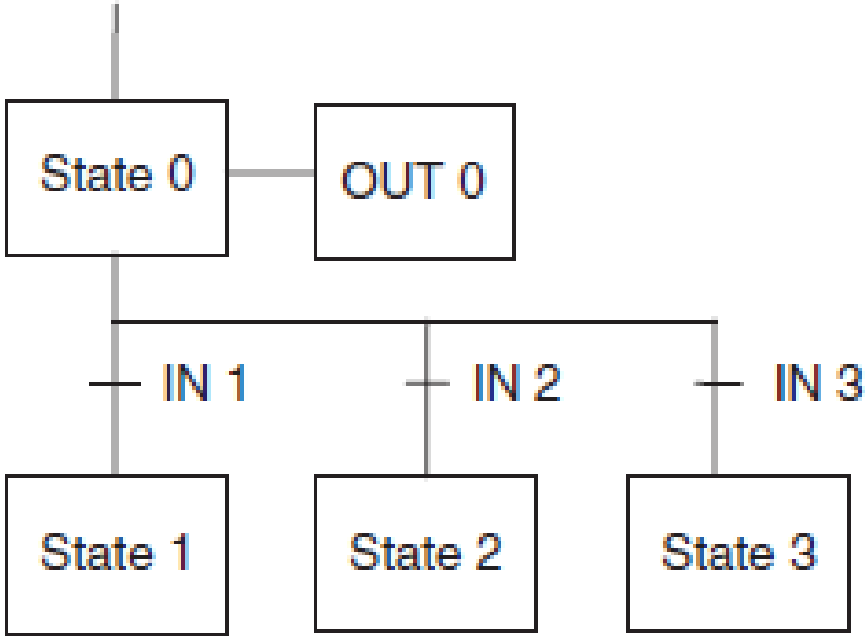

State 1 occurs if the transfer condition IN 1 occurs, but if IN 2 then state 2 or if IN 3 then state 3

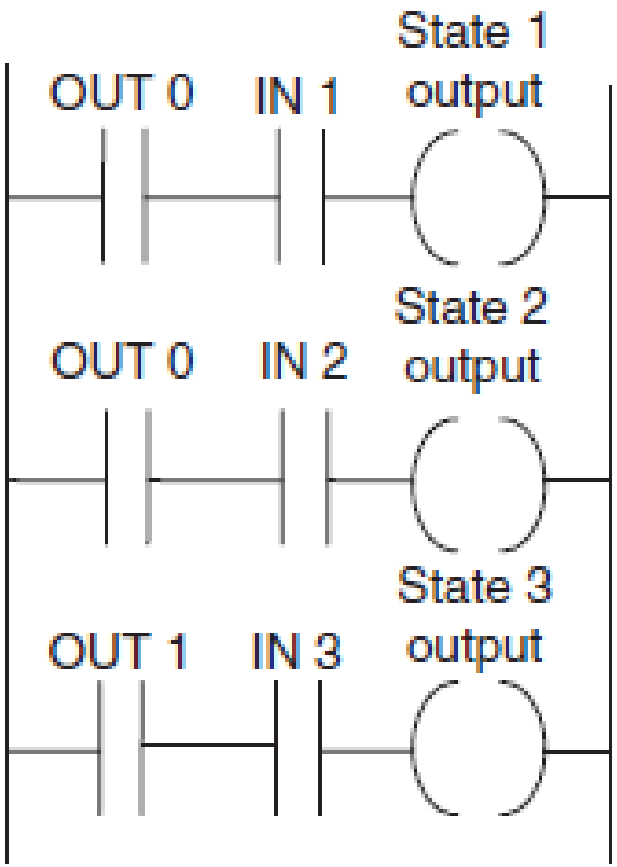

Brancing and Convergence

Parallel Brancing

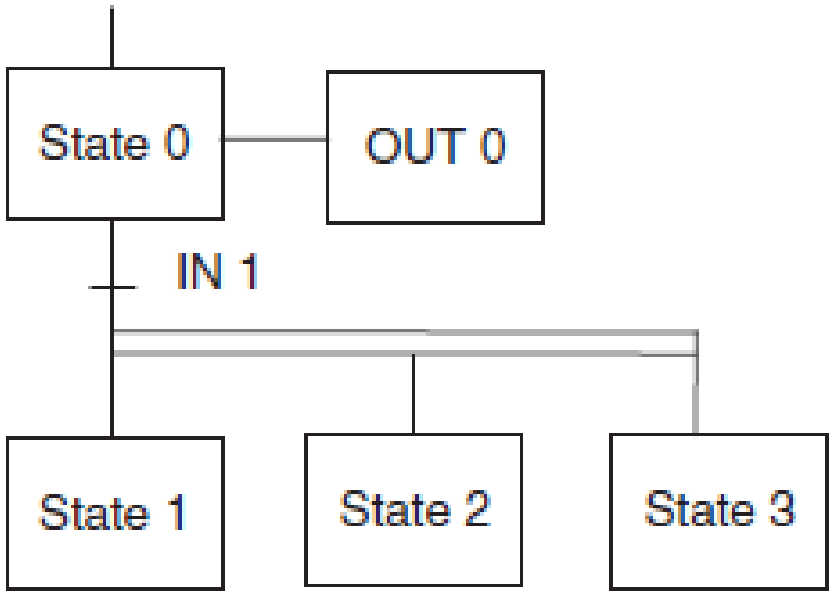

When IN 1 occurs then state 1, state 2 and state 3 are all simultaneously realized.

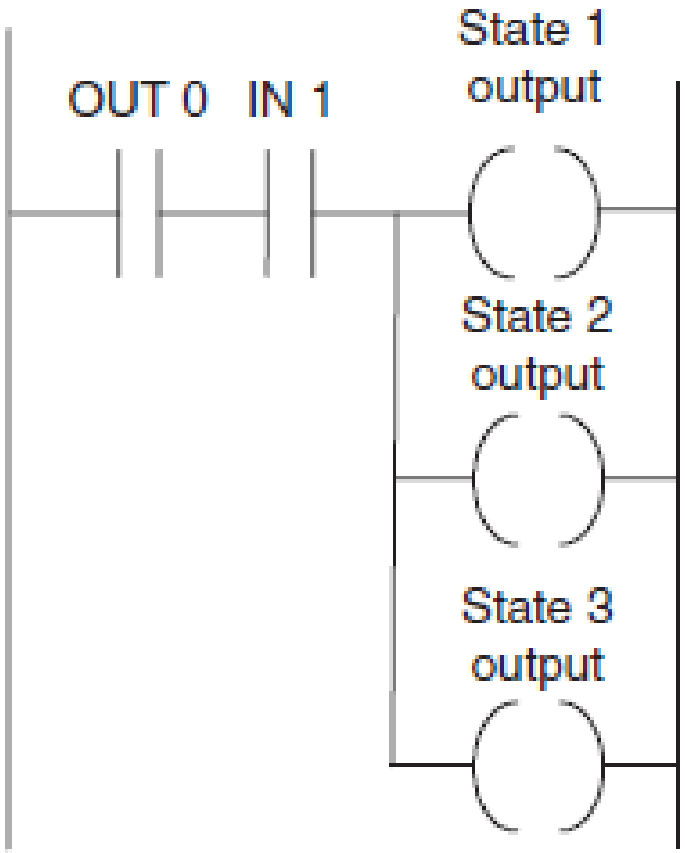

Brancing and Convergence

Parallel Brancing

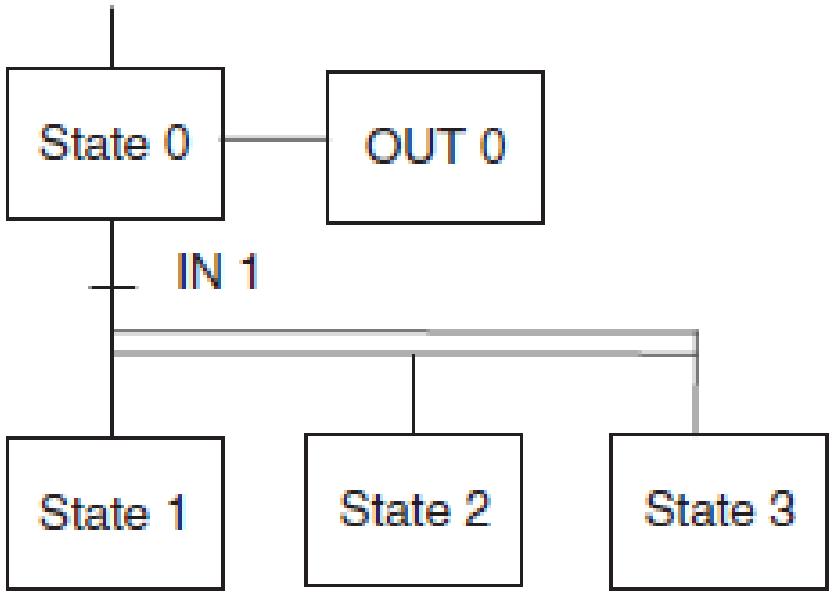

When IN 1 occurs then state 1, state 2 and state 3 are all simultaneously realized.

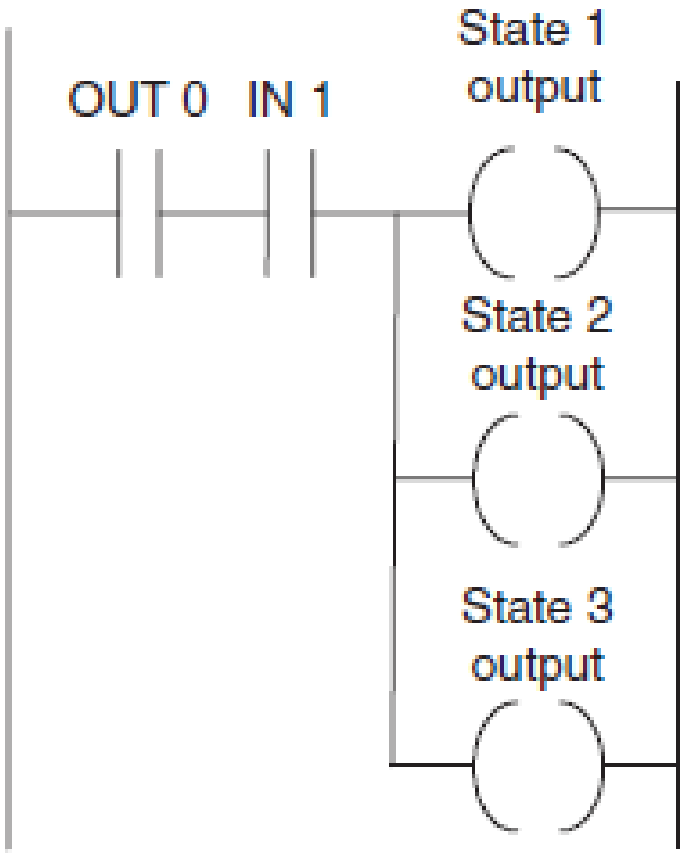

Brancing and Convergence

Convergence

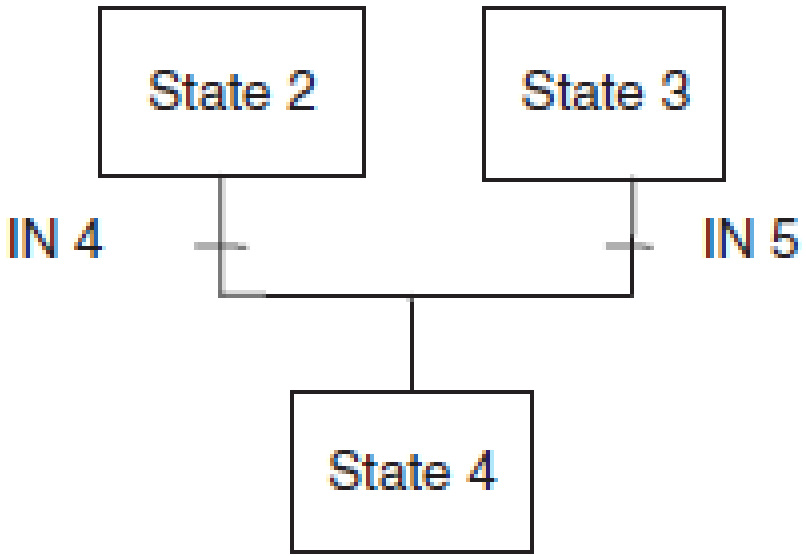

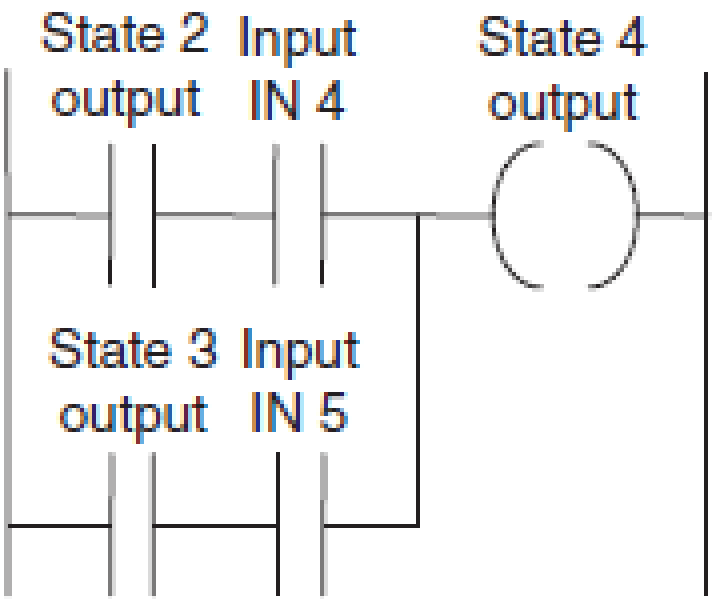

Brancing and Convergence

Simultaneous Convergence

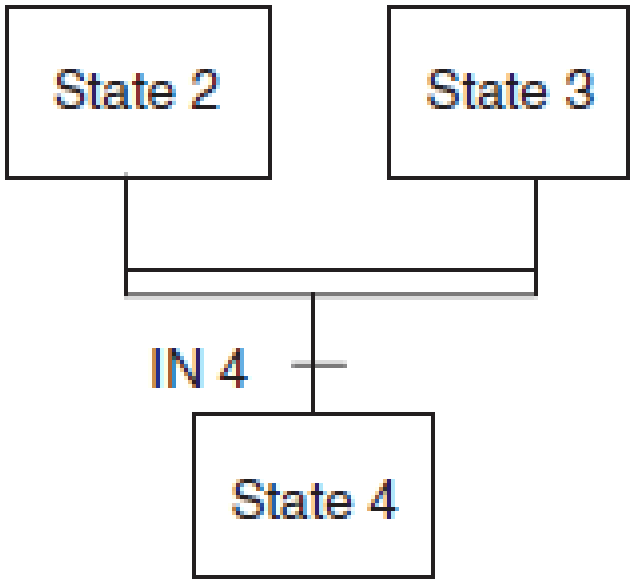

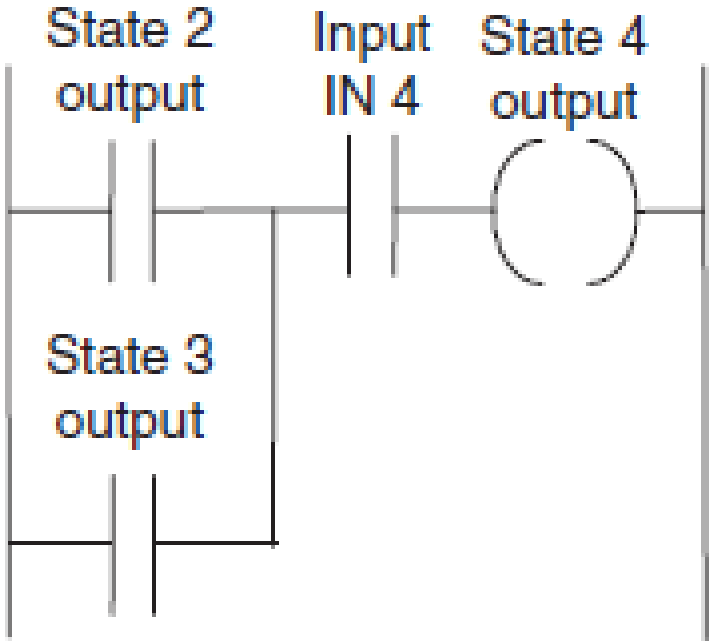

Simultaneous convergence: When IN 4 occurs State 4 follows from either State 2 or 3.

An illustration

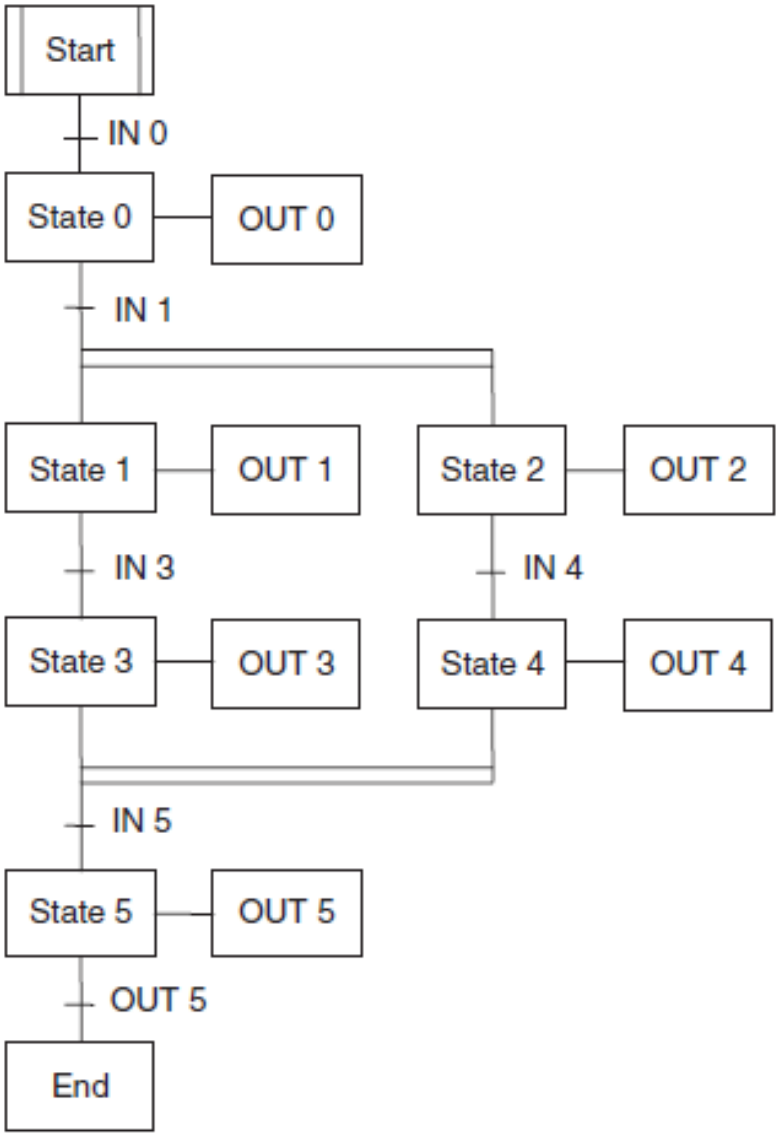

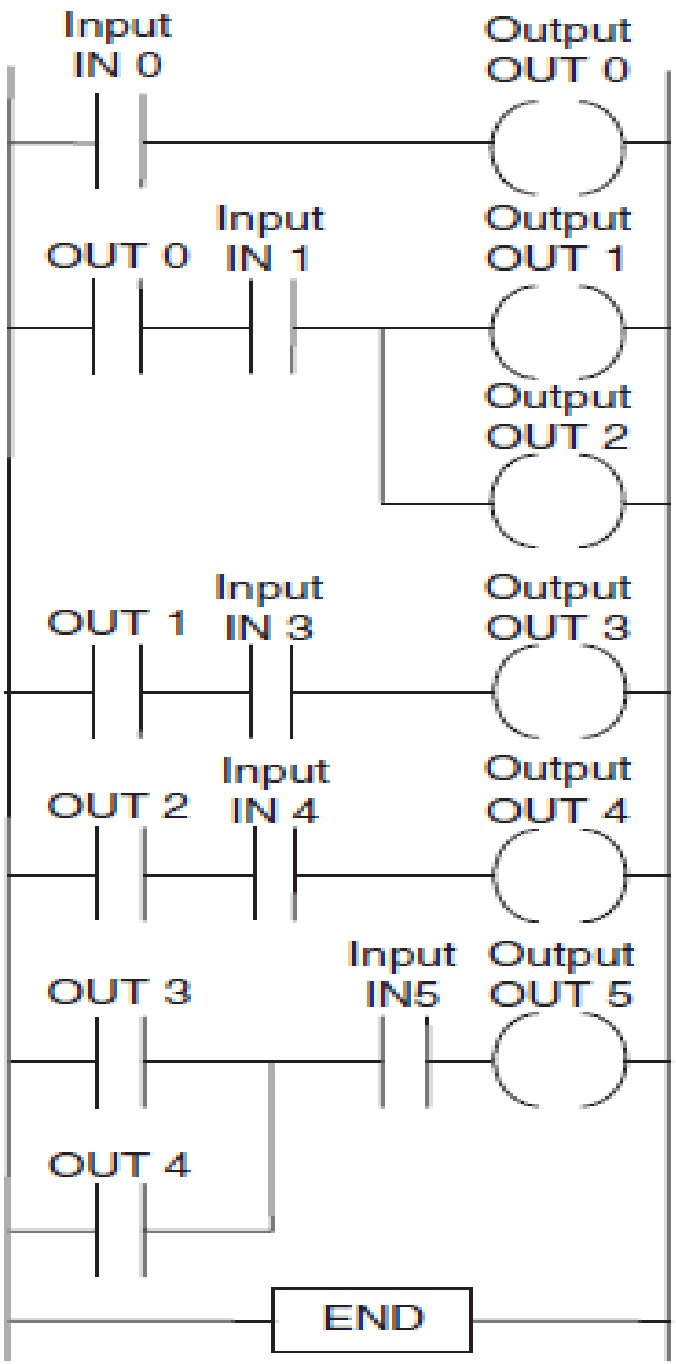

Action

- Action represented by a ladder diagram

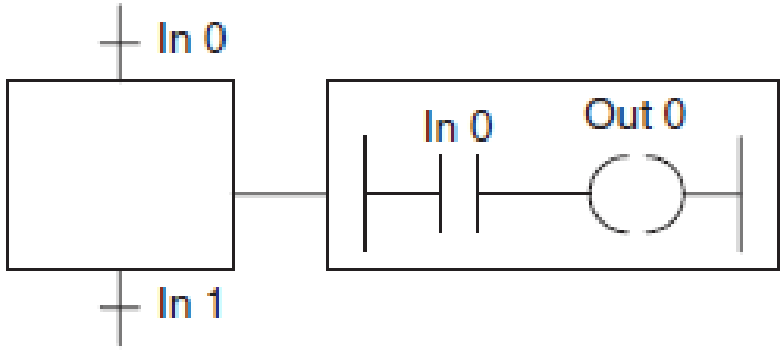

- Illustration of a qualifier used with an action, this being a time-limited action

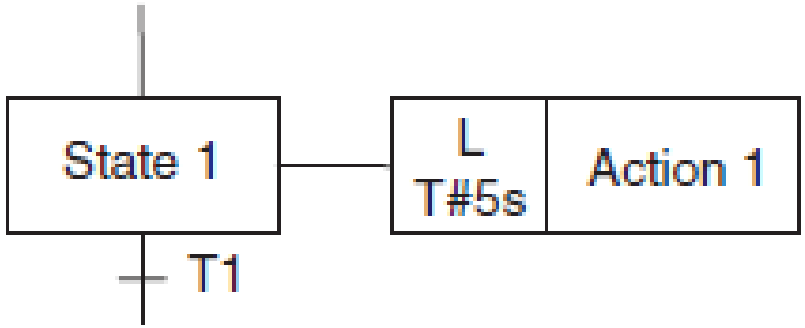

Problem Case

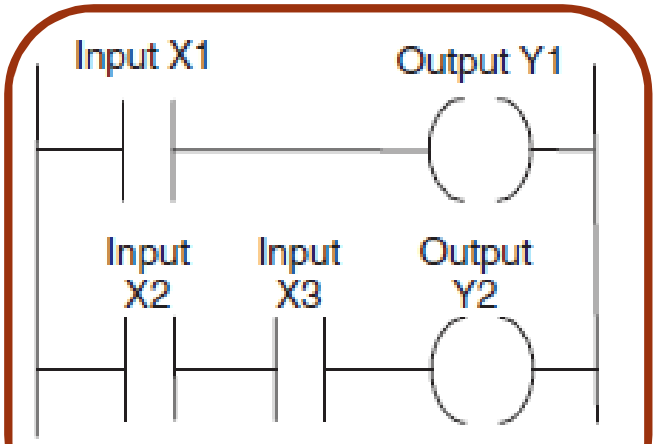

- Which one?

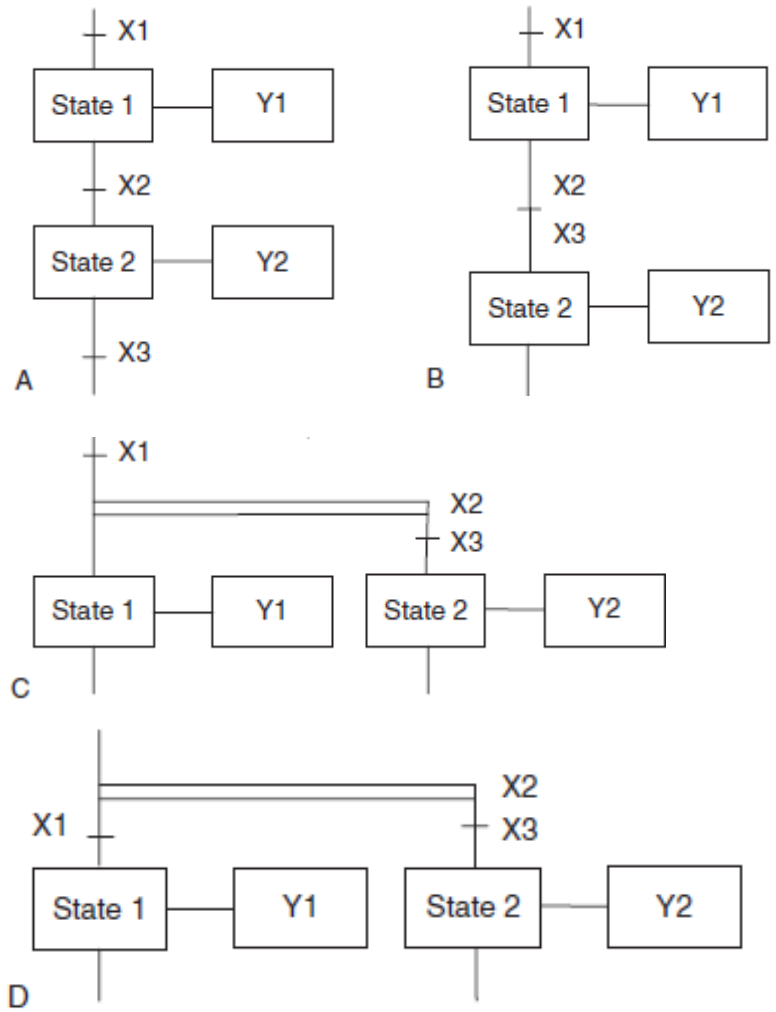

Convert to the Ladder Diagram

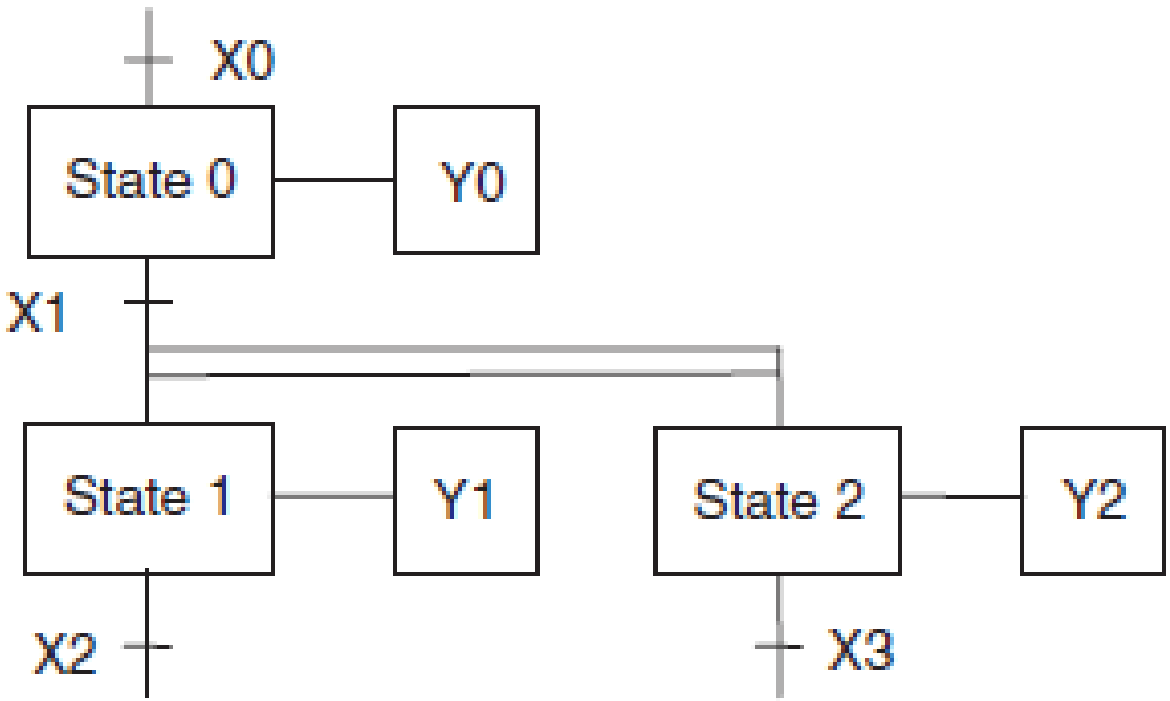

Convert to the Ladder Diagram